Top Studio
Detail Master

1/12 FW14B RS3C ENGINE Early Type

SUPER DETAIL-UP SET 6A

www.topstudiohobby.com

TD23280

FOR TAMIYA 12029

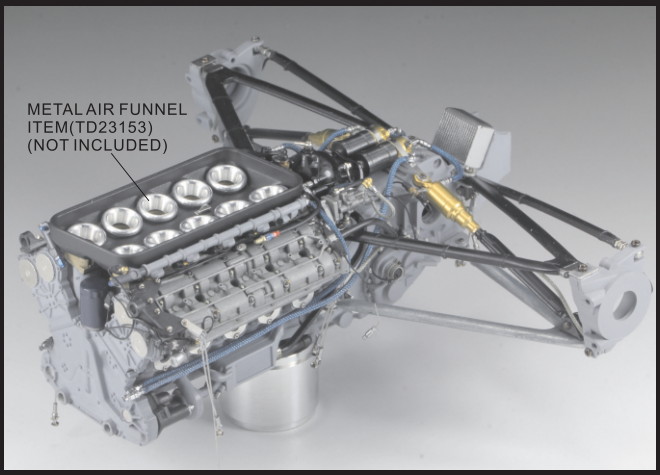

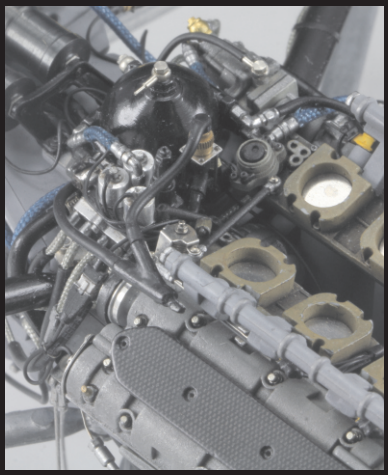

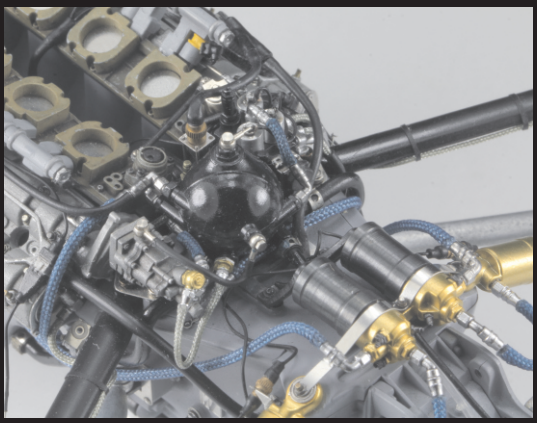

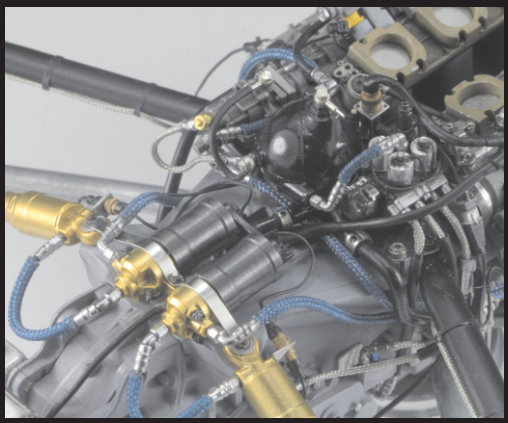

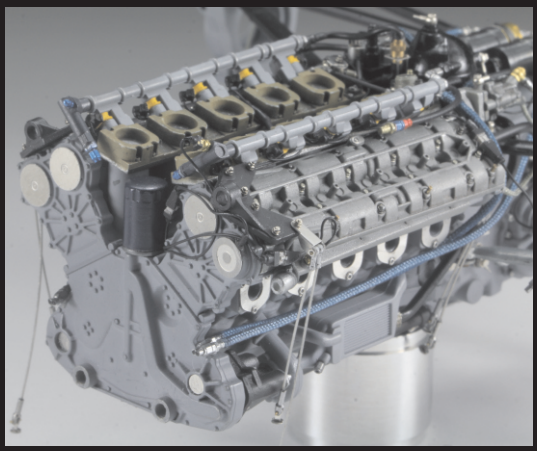

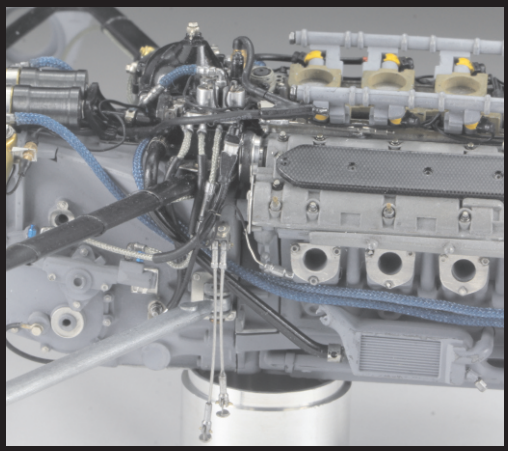

1/12 FW14B RS3C ENGINE SUPER DETAIL-UP SET 6A

Early Type

Top Studio Detail Master

www.topstudiohobby.com

TD23280

FOR TAMIYA 12029

樹脂部件 Resin Parts

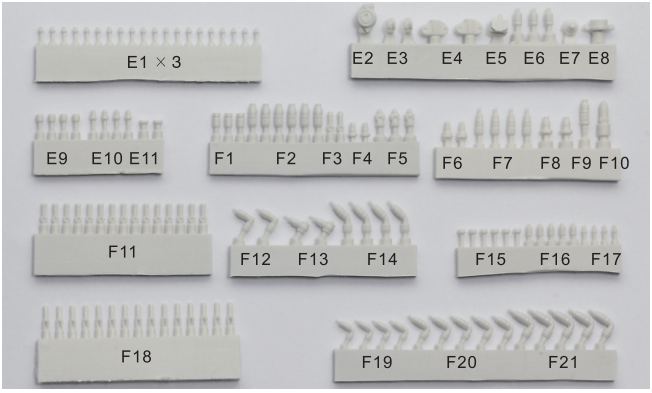

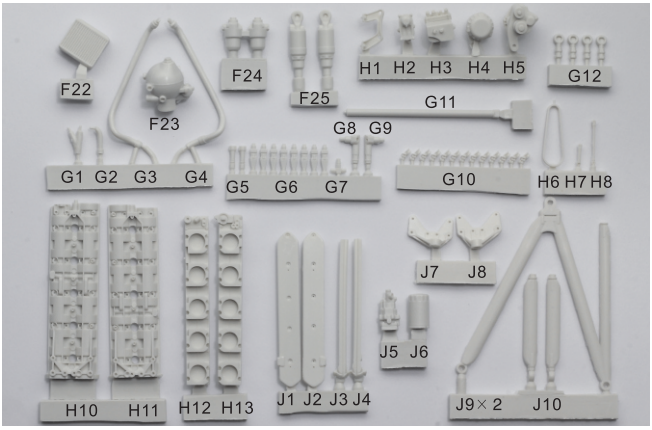

金屬部件 Metal Parts

M1			× 1
M2		TD23135	× 1
M3		TD23134	× 3
M4			× 1
M5			× 1
M6		TD23087	× 5
M7		TD23237	× 15
M8			× 3
M9		TD23251	× 5
M10		TD23267	× 5
M11			× 2
M12			× 2
M13			× 2

其他部件 Other parts

蝕刻片 Photo-etched plate A,B ×1
黑色膠貼 Black band ×1
水貼 Decal ×1

鑽孔 Drill a hole	
切除 Cut off	

配綫 Wire

1	0.3mm 黑色電綫	0.3mm black wire	×1
2	0.6mm 黑色電綫	0.6mm black wire	×1
3	0.3mm 銅管	0.3mm brass pipe	×2
4	1.2mm 熱縮管	1.2mm shrink rube	×2
5	1.6mm 熱縮管	1.6mm shrink rube	×1
6	透明熱縮管	Clear shrink rube	×1
7	1.0mm 藍色編織綫	braided line (blue)	×1
8	0.8mm 藍色編織綫	braided line (blue)	×1
9	0.6mm 銀色編織綫	braided line (sivery)	×1
10	0.3mm 金屬綫	0.3mm metal wire	×1
11	0.3mm 鋼綫	0.3mm steel wire	×1
12	1.0mm 銅管	1.0mm brass pipe	×1
13	0.3mm 錫綫	0.3mm solder line	×1
14	0.5mm 銅管	0.5mm brass pipe	×1

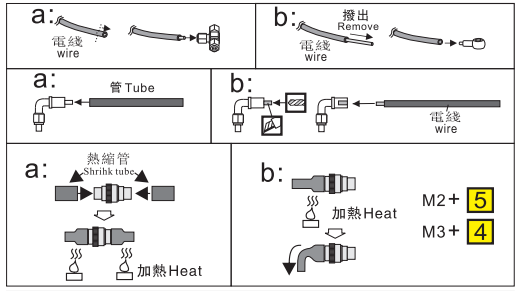

喉箍 Hose clamps

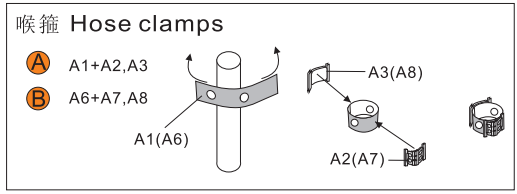

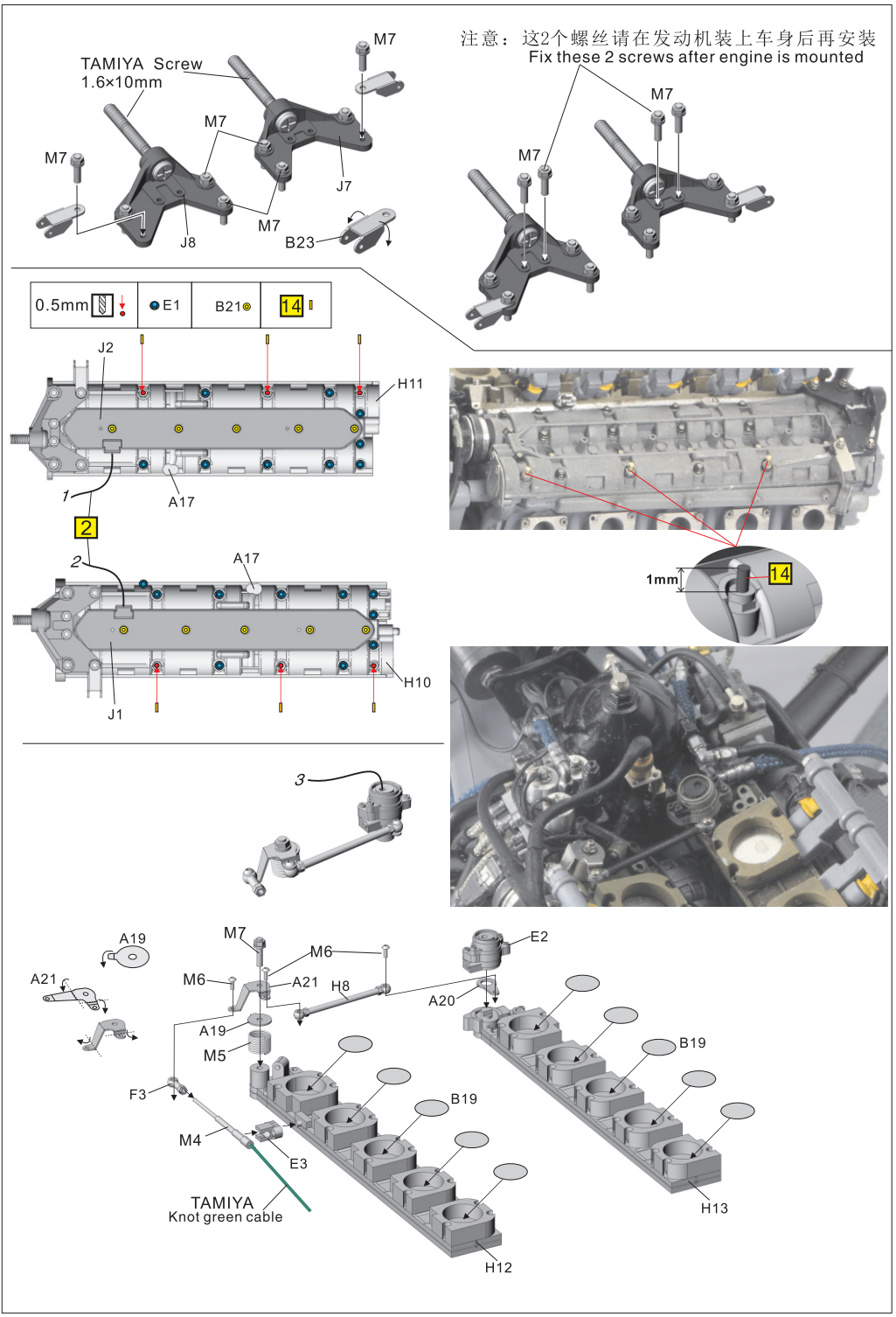
TAMIYA Screw
1.6×10mm
M7
M7
M7
M7
J7
J8
M7
B23
注意：这2个螺丝请在发动机装上车身后再安装
Fix these 2 screws after engine is mounted
M7
M7
0.5mm
E1
B21
14
J2
H11
1
A17
2
2
A17
H10
J1
1mm
14
3
A19
A21
M7
M6
M6
A21
H8
A19
M5
E2
A20
B19
F3
B19
M4
E3
TAMIYA
Knot green cable
H13
H12

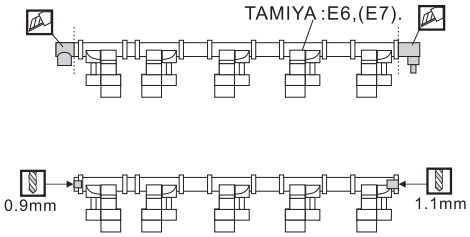
TAMIYA :E6,(E7).
0.9mm
1.1mm

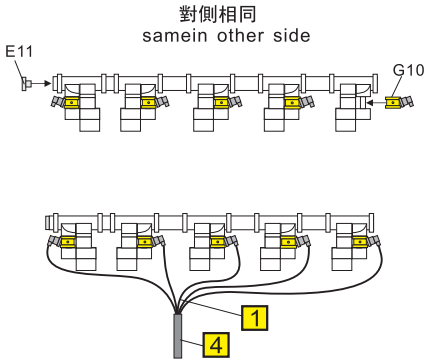
對側相同
samein other side
E11
G10
1
4

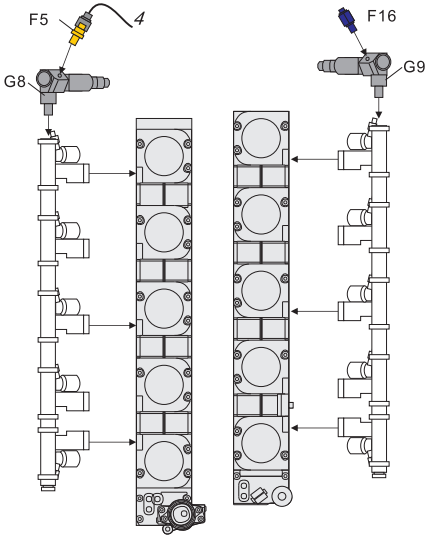
F5
4
G8
F16
G9

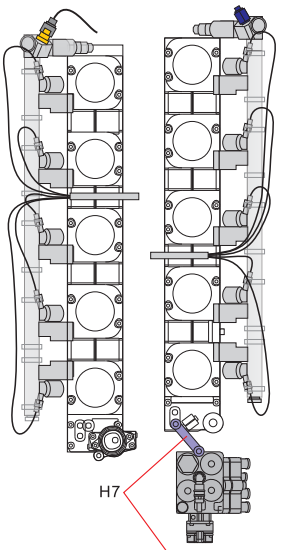
H7

A27
TAMIYA :C33.

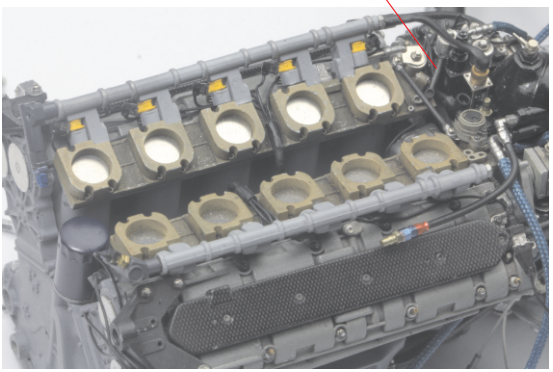

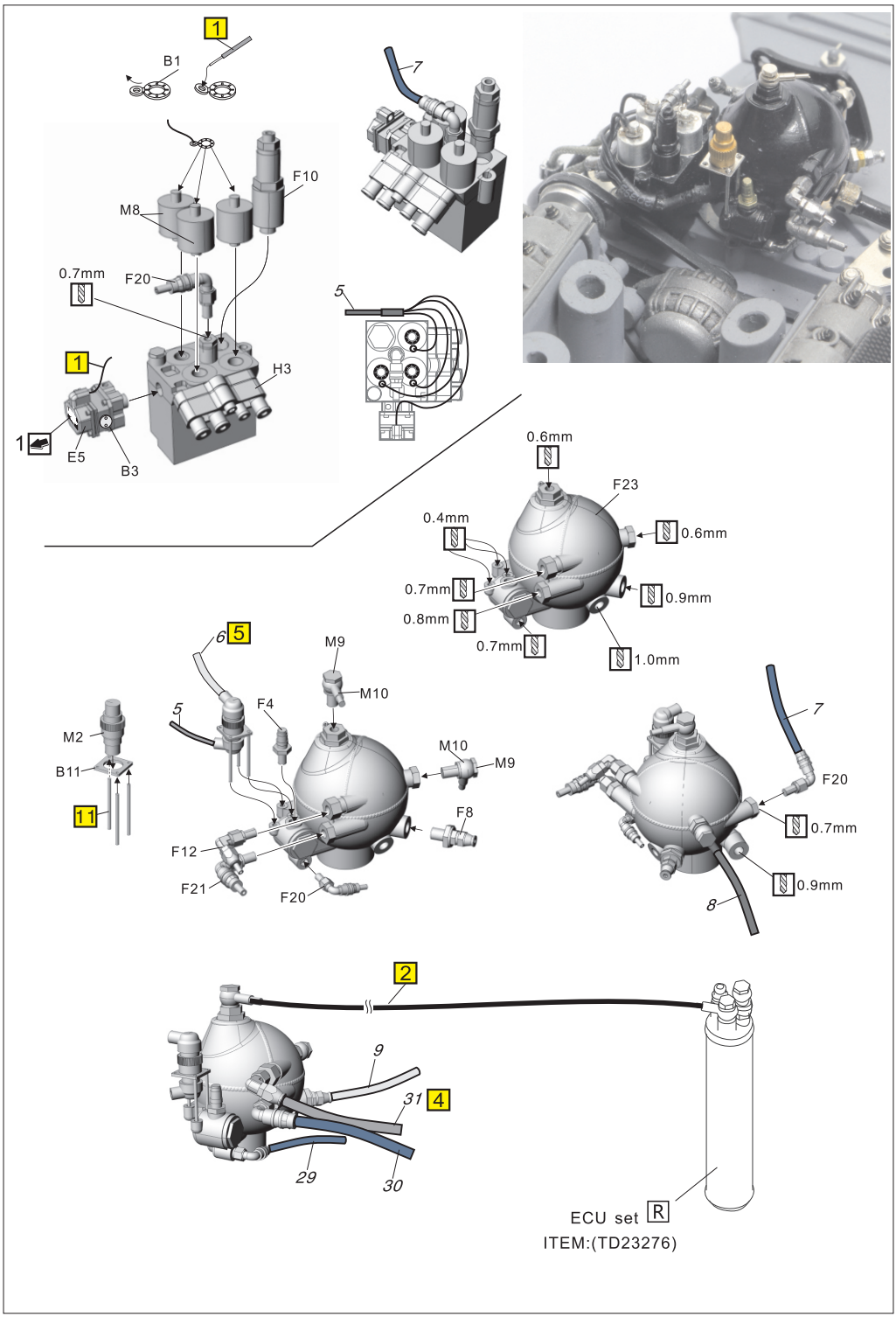
1
B1
7
F10
M8
0.7mm
F20
5
1
H3
1
E5
B3
0.6mm
F23
0.4mm
0.6mm
0.7mm
0.9mm
0.8mm
0.7mm
1.0mm
6
5
M9
M10
5
F4
M2
M10
B11
M9
11
F8
F12
F21
F20
7
F20
0.7mm
0.9mm
8
2
9
31
4
29
30
ECU set R
ITEM:(TD23276)

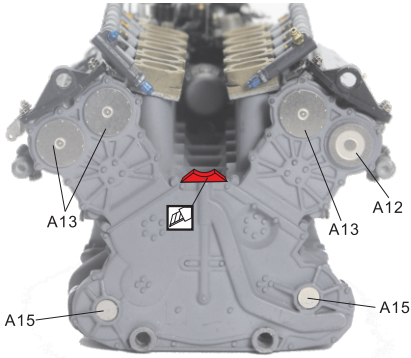
A13
A13
A12
A15
A15

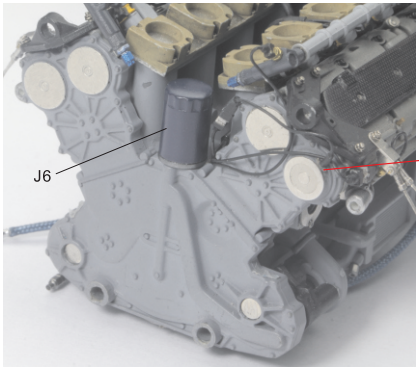
J6
11
B2

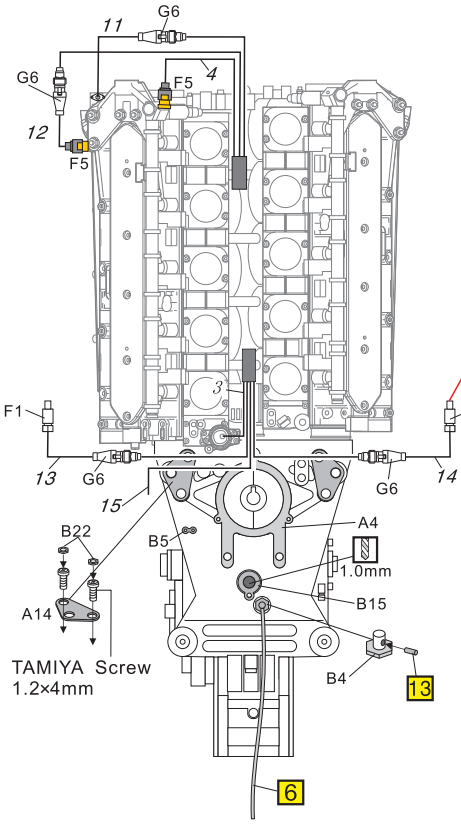
11
G6
G6
4
F5
12
F5
3
F1
F1
13
G6
G6
14
15
B22
B5
A4
1.0mm
B15
A14
TAMIYA Screw
1.2×4mm
B4
13
6

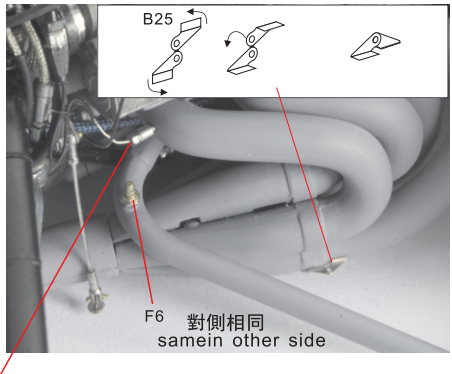
B25
F6
對側相同
samein other side

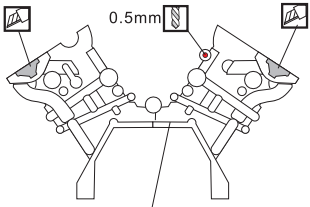
0.5mm
TAMIYA :E10.

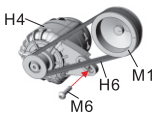
H4
M1
H6
M6

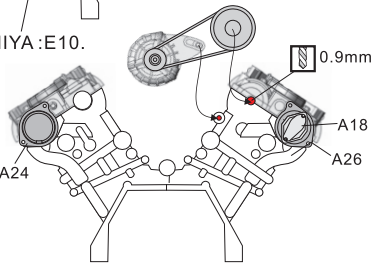
0.9mm
A18
A26
A24

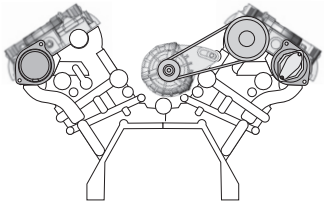

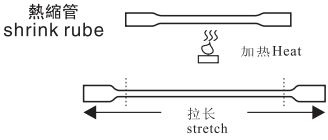
熱縮管
shrink rube
加热Heat
拉长
stretch

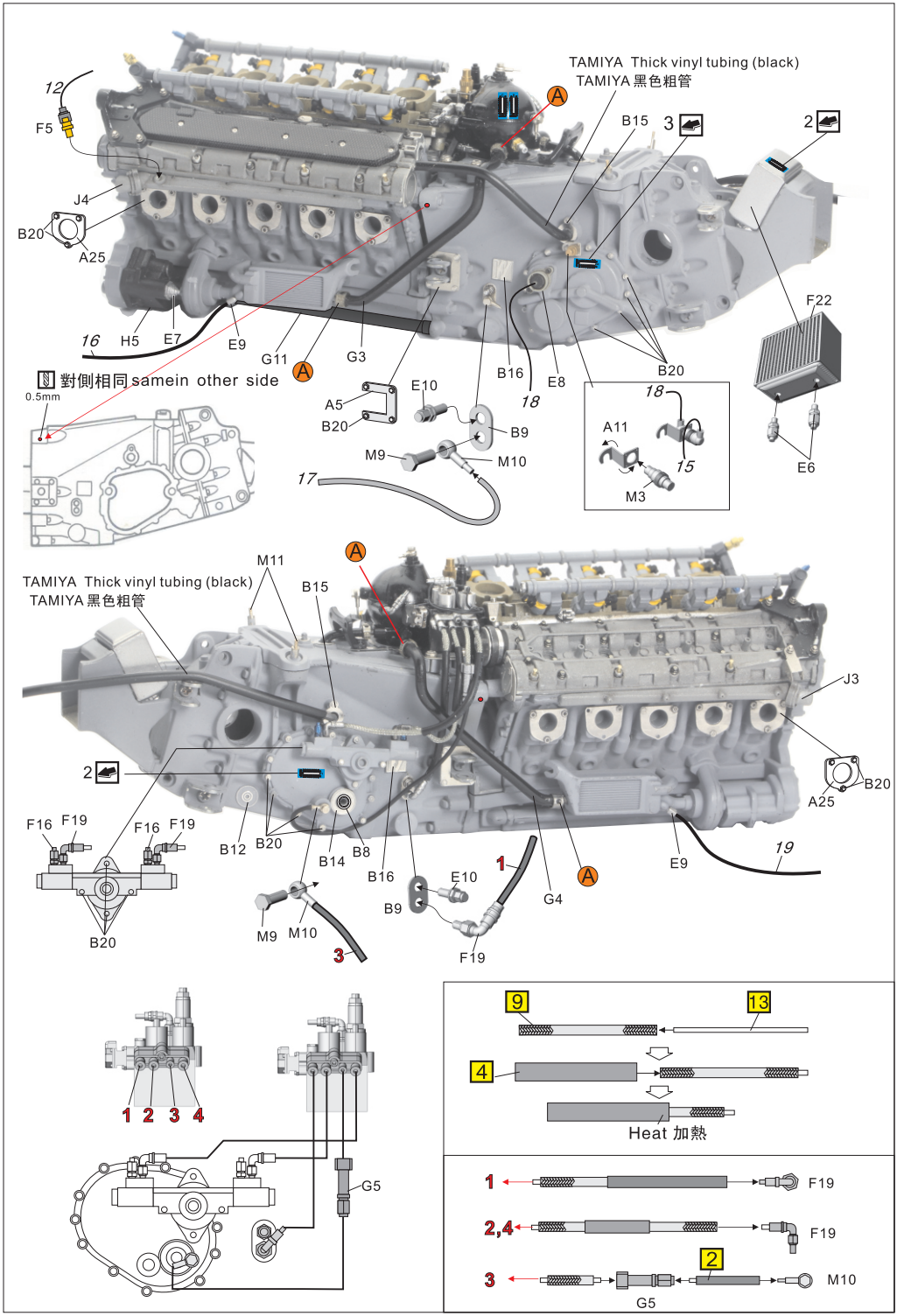
TAMIYA Thick vinyl tubing (black)
TAMIYA 黑色粗管
12
F5
J4
B20
A25
16
H5
E7
E9
G11
G3
A
B15
3
2
B16
E8
B20
F22
E6
18
A5
B20
E10
B9
M9
M10
17
A11
15
M3
對側相同samein other side
0.5mm
M11
B15
J3
B20
A25
2
F16
F19
F16
F19
B20
B12
B20
B14
B8
B16
E10
B9
M9
M10
3
1
G4
F19
E9
19

1 2 3 4
G5

9
13
4
Heat 加熱
1
F19
2,4
F19
2
3
M10
G5

TAMIYA黑色細管
TAMIYA Thin vinyl tubing(black)

ECU set Y9
ITEM(TD23276)

20

A9

A10

對側相同
samein other side

TAMIYA :A9,(A10).

27(26)

G1

6 5

21 to
rear brake
后刹車

G7

22

J9

后刹車
rear brake

B

G2

4

5

23

24

25

G12

27

26 to
TAMIYA :(A10).

黑色膠貼 Black band

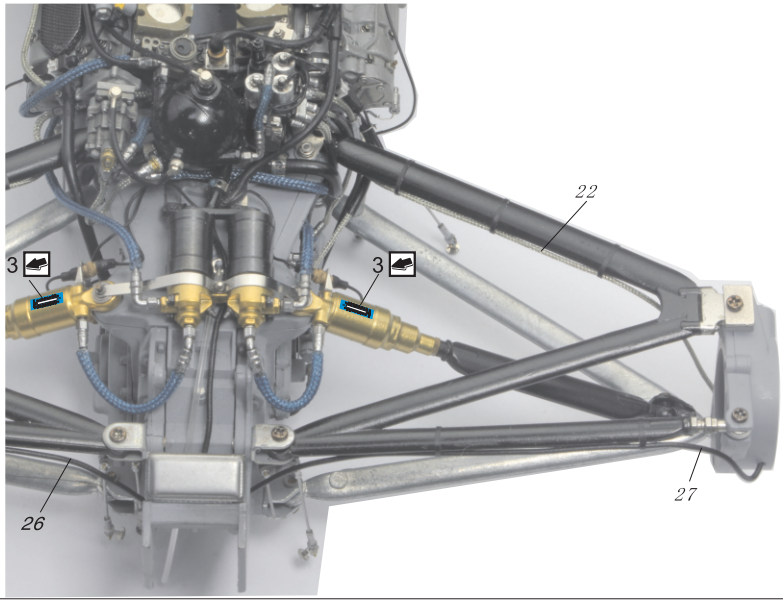

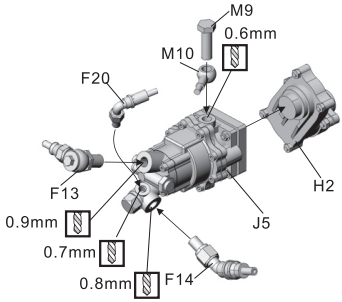

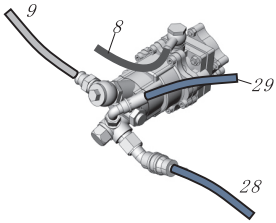

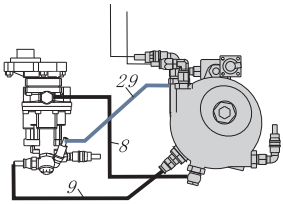

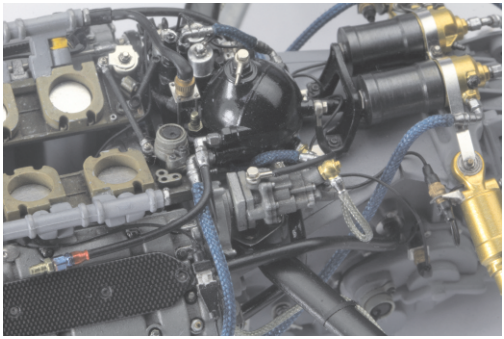

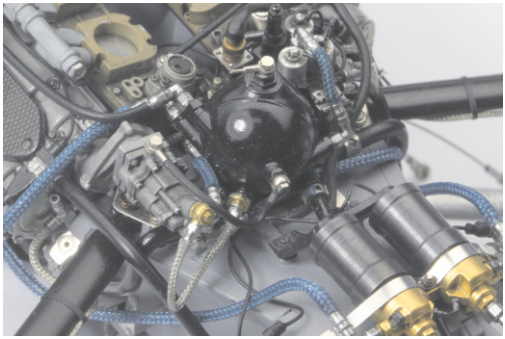

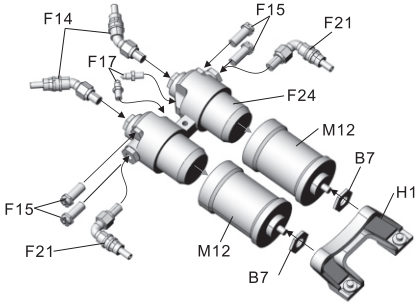

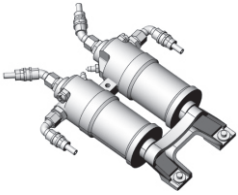

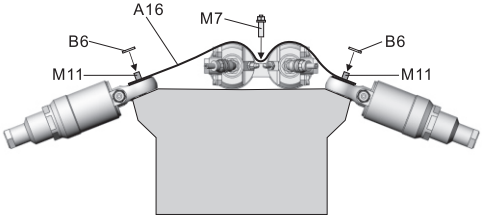

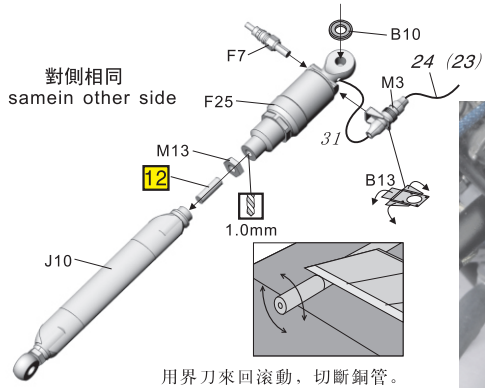

用界刀來回滾動，切斷銅管。
cut the brass pipe by moving the blade

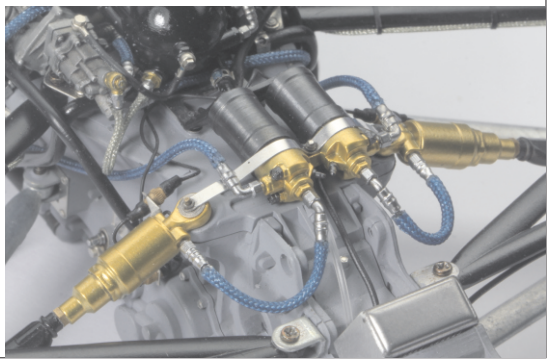

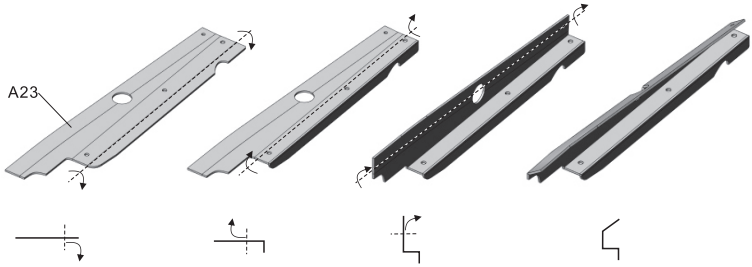
A23

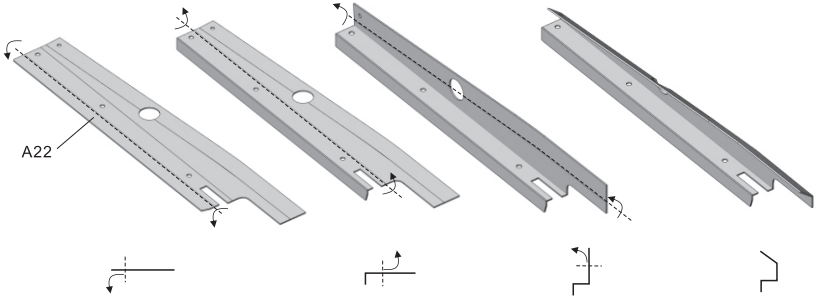
A22

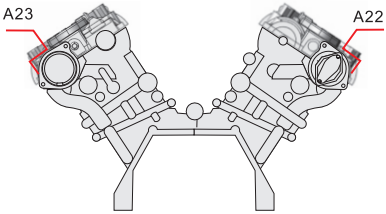
A23
A22

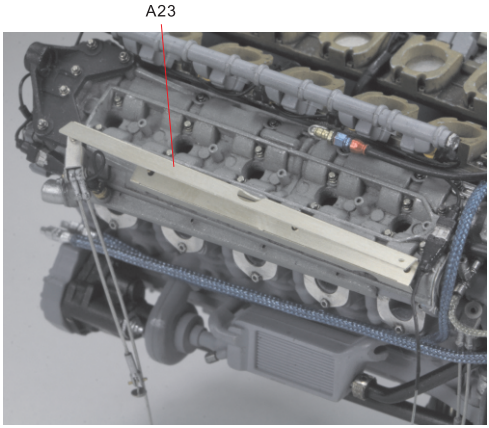
A23

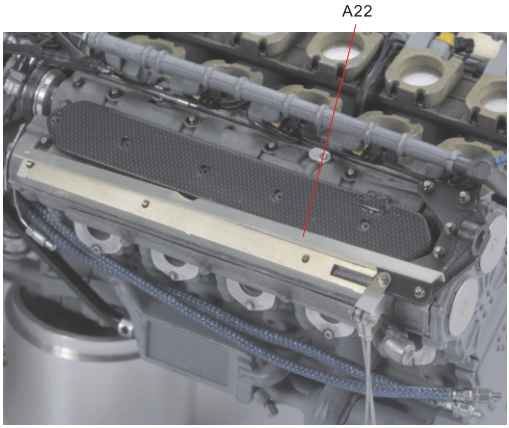
A22

flat bottom supporting rod
底盤拉杆

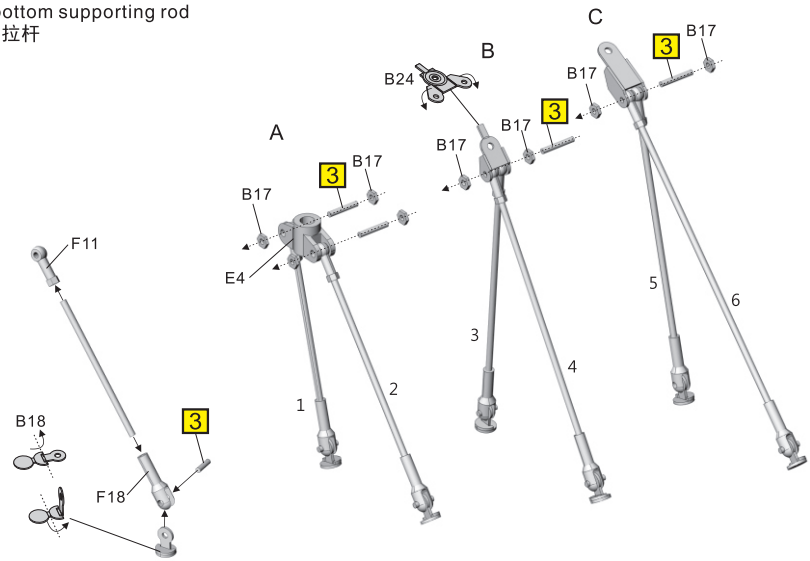

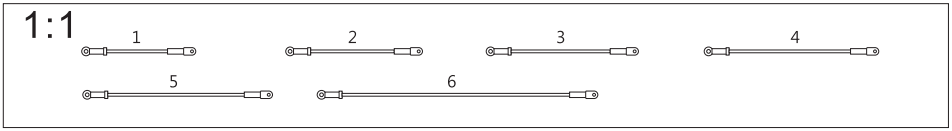

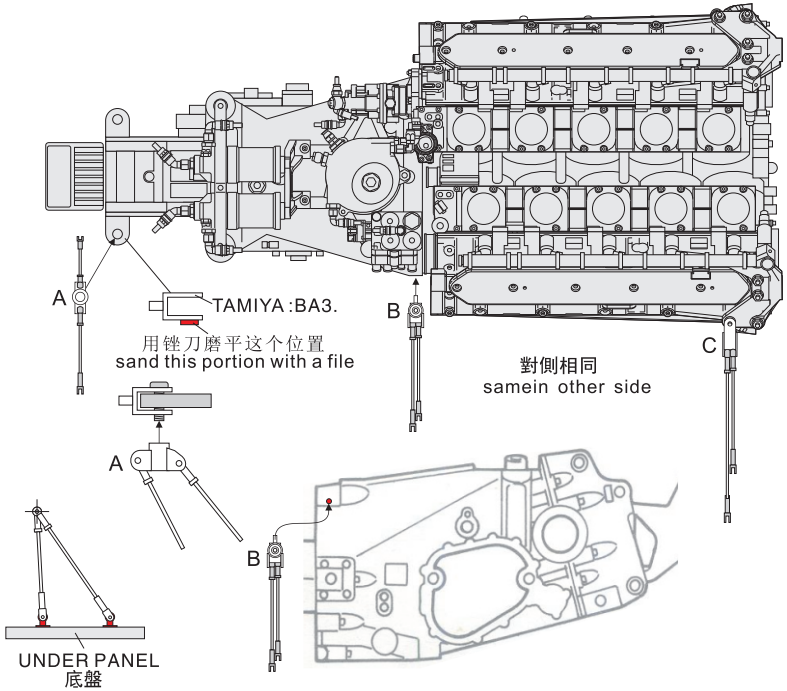
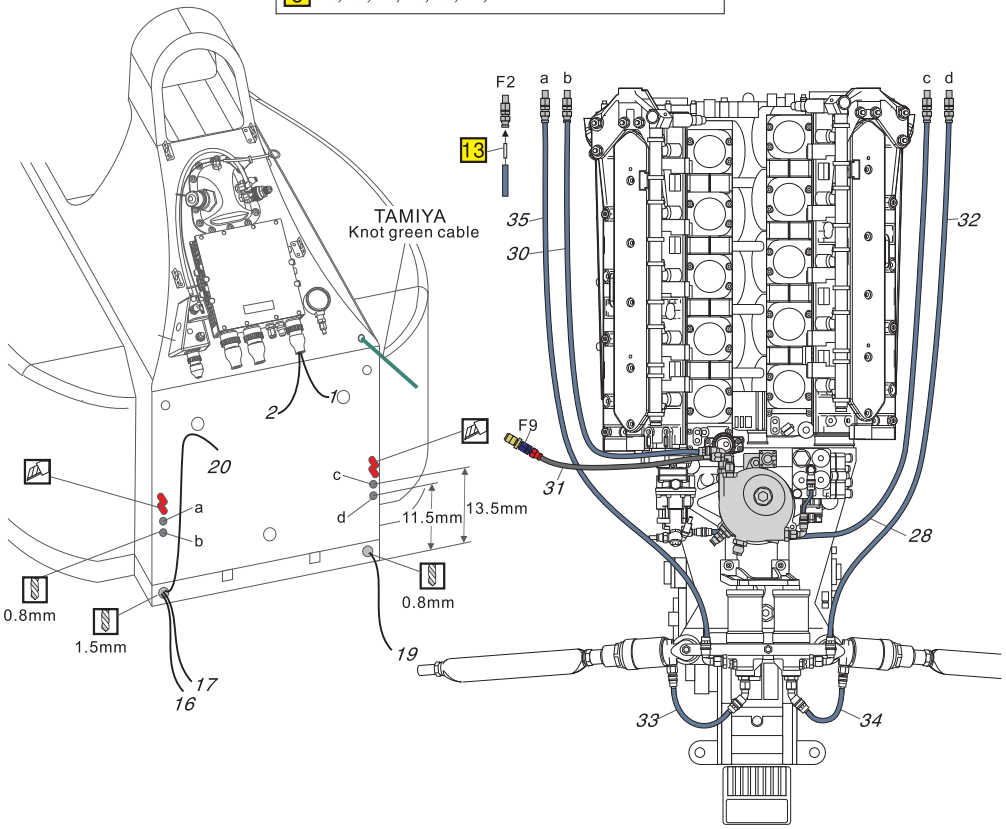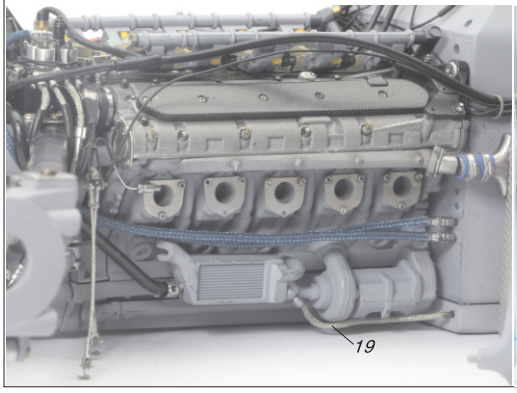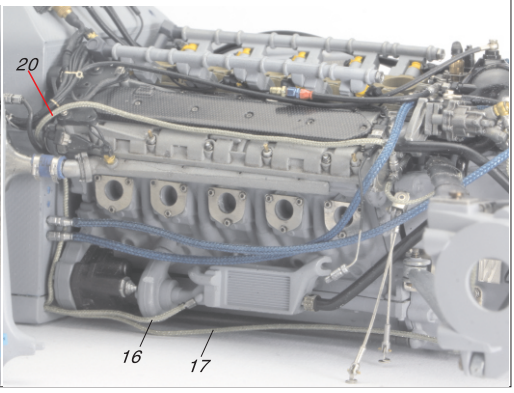
1	3,4,11,12,13,14,15,18,23,24.
2	1,2,5,8,25,26,27.
7	28,30,32,33,34,35.
8	7,29.
9	9,16,17,19,20,21,22.